X800 N PRO Speedlite

For Nikon

User Manual

English

Warning

- Do not expose this product in high temperature location or confined spaces exposed to strong direct sunlight and other overheating places.
- Keep it dry. Do not touch this product with wet hand. Do not expose this product to water or rain, or you may not be able to use it.
- Do not use it in inflammable gas, or it may cause explosion or fire.
- This product involved in battery. Please strictly follow the corresponding operations related to battery, or it may cause explosion or fire.
- Do not put the component in strong vibration, or it may cause fault of this product.
- Remove the batteries during long periods of non-use.
- Do not use the flash light in a short distance from the eyes, or it may cause possible injury to eyes or blindness.
- After continuous use, it will be very hot. Do not touch, or it may cause burn.
- After continuous use, the battery might be hot. Please be careful when changing new battery.
- Do not disassemble or maintain this product by yourself. The internal high voltage will cause electric shock.
- Only the same brand and battery type can be used.
- Make sure the batteries are installed correctly, or it may lead to leak, overheat or crack.

Specifications

GN:	60 (ISO100 200mm)
Flash coverage Range:	20 -200mm
Auto ZOOM:	According to shooting angle and image to auto adjust the coverage range
Manual ZOOM:	According to camera or flash setting to adjust the zoom range
Flash Mode:	i-TTL/M/RPT
Stroboscopic Flash:	1-500Hz
Wireless Flash:	FSK 2.4GHZ radio transmission/optical transmission, supports Master/Slave, S1/S2
SYNC Mode:	High Speed Sync, 1st Curtain Sync, 2nd Curtain Sync, Red-eye Reduction Sync
Illumination Mode:	Standard, Evenness, Center-weighted
Adjustable Angle:	Up/down:-7/90 degree Left/Right:180 degree/180 degree
Manual Flash:	1/128-1/1 output control (1/3rd increments)
Recycle Time:	Less than 2.5 sec (1/1 full power output)
LCD Display Screen:	High definition dot matrix screen
Internal Power Source:	4×AA size alkaline batteries or rechargeable batteries
External Interface:	Hot shoe, PC port, USB port, external power port
EV:	In 1/3rd increments (±3 stops)
Battery Life:	180 times(1/1 flash output, with Sanyo Eneloop batteries)
Flash Tube:	Ultra-long battery life design
Overheating Warning:	Multi dot matrix temperature control, battery and flash tube overheating warning
AF-Assist Beam:	29 point assist focus point
FV Lock:	Support
Firmware Upgrade:	Support
Dimension:	78.04mm×60.50mm×193.00mm
Weight:	408.7g (excluding batteries)

Component Name

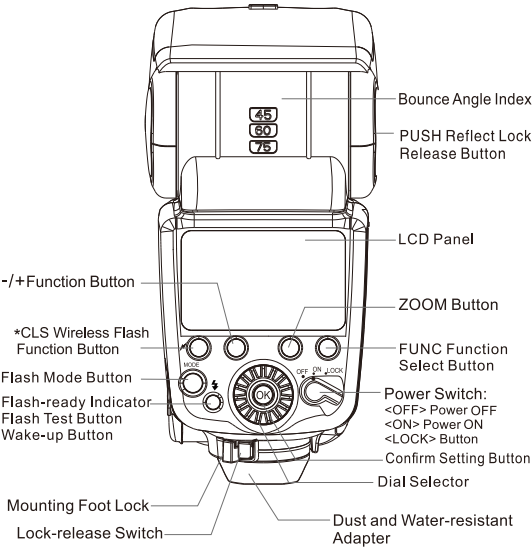

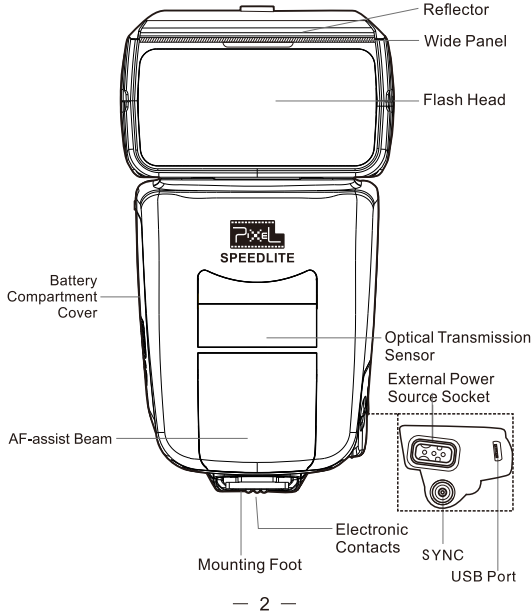

Main Function Interface

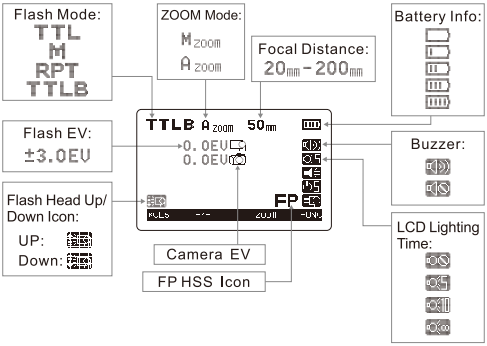

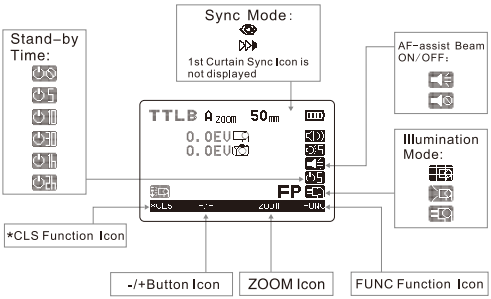

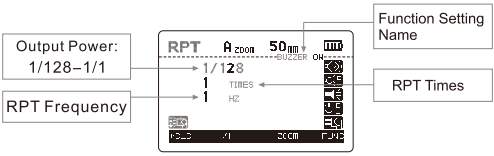

Wireless Master Interface

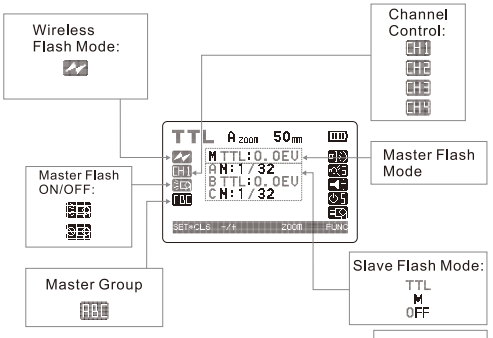

Slave Interface

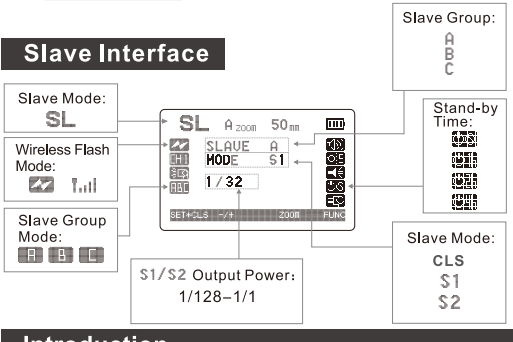

Introduction

PIXEL X800N PRO(PRO version) is a high-performance speedlite featuring powerful flash GN60, small and exquisite and accurate firing; it has a built-in FSK2.4GHz wireless flash control system. It's compatible with the Pixel King PRO/Nikon by direct control; the recycle time is less than 2.5sec in full power output. It's compatible with all of Nikon DSLR cameras; due to the energy-saving design, it can fire 180 times in full power output; X800N PRO has invented multi-dox matrix temperature control design which can ensure no overheating or malfunction; it enjoys exquisite external appearance, high definition dot matrix screen, concise function interface design, and easy and simple to handle; user can also upgrade firmware via USB port .

Button Function Introduction

Dial Selector

This dial selector is applied to adjust setting parameter of the flash. Turn left to reduce setting parameter, and turn right to increase setting parameter.

*CLS Function Button

Press and hold this button to enter wireless control mode. Press and hold this button to enter wireless flash Master mode; and then press and hold this button again to enter Slave mode; and press and hold this button once again to exit wireless flash mode.

SET*CLS: under wireless mode, gently press this button to set wireless flash function. Hold and press again to enter next function. With*asterisk function button means press and hold this button to enter the corresponding function setting.

-/+ Setting Button

This function button is applied to adjust flash output power parameter.

ZOOM

This Zoom button is applied to set Zoom mode, divided into manual zoom[M zoom]and auto zoom[A zoom]. Set this function with dial selector.

※ Focal distance can set as 20-200mm. Some cameras do not support higher focal distance. The setting of focal distance is subject to camera. In a range of 20-200mm, it will be displayed correctly. But an error may occur if out of this range ,or the range doesn't conform to this flash.

FUNC Function Setting

The FUNC Function can set Buzzer, LCD Back Light Time, AF-assist beam, Stand-by Time and Illumination Mode function individually.

The sort order of the LCD function is : Buzzer[ ]→LCD Back-Light Time[ ]→AF-assist beam[ ]→Stand-byTime[ ]→Illumination Mode[ ].

Buzzer Setting

Gently press FUNC button to enter Buzzer setting and then turn dial selector. Select to Buzzer ON[ ]or OFF[ ], press OK button to confirm the setting.

LCD Illumination Time Setting

Continuously press FUNC button to enter LCD Illumination Time Setting[ ], and then turn dial selector to select LCD Illumination Time.

[ ] means on all the time;
[ ] means on for 5 sec;
[ ] means on for 10 sec;
[ ] means turn off the light.
Press OK to confirm the setting.

AF-assist Beam Setting

AF-assist beam is mainly applied to low-light or low contrast shooting environment. Under this condition, the built-in AF-assist beam activates automatically to help autofocus .

Continuously press FUNC button to enter AF-assist beam setting [ ]. Turn dial selector to select AF ON [ ] or AF OFF[ ], and then press OK to confirm setting.

Stand-by Time Setting

Continuously press FUNC button to enter stand-by time setting. Turn dial selector to select stand-by time.

[ ] means 5mins stand-by time;
[ ] means 10mins stand-by time;
[ ] means 30mins stand-by time;
[ ] means 1hr stand-by time;
[ ] means 2hrs stand-by time;
[ ] means non-sleep mode.
After selected, press OK button to confirm the setting.
Under Slave mode, you can set stand-by time as 1 hrs., 2 hrs., 4 hrs. and non-sleep mode.

When flash entered sleep mode, the flash display screen will show [SLEEP] icon. Half-press camera shutter or press Flash Test Button to wake-up the flash.

Illumination Mode Setting

Continuously press FUNC button to enter Illumination Mode Setting [ ] , the and then turn dial selector to select Illumination.

Mode:

Standard Illumination Mode[ ], the basic illumination mode for common flash photography environments; Evenness Illumination Mode [ ], the light falloff at the edge of the image is less than with the standard illumination mode;Center-weighted Illumination Mode [ ], the center-weighted mode provides larger guide numbers at the center of the image than the standard illumination mode.

※ Evenness Illumination Mode is suitable for group photographs, in which sufficient light is required without light falloff at the edges.
※ Center-weighted Illumination Mode is suitable for portraits, in which the light falloff at the edge of an image can be ignored.

LOCK

It's applied to lock the parameter settings of the flash, avoiding the flash parameter may be changed accidently.

MODE

Flash mode button. It's applied to set the flash mode. You can set the flash mode to i-TTL full auto flash, Manual flash and RPT flash mode individually.

Press and hold this button to reset your flash to the original factory settings.

TTL

TTL is Nikon standard i-TTL mode. Under this mode, the flash output level is adjusted regardless of background brightness, making the main shooting subject get correct exposure. Under TTL mode, the EV (Exposure Compensation Value) can be set in 1/3 EV steps from −3.0 EV to +3.0 EV.

TTLB

TTLB is Nikon i-TTL balanced fill-flash. Under this mode, the flash output level is adjusted, making the main shooting subject and background get balanced exposure.Under TTLB mode, the EV (Exposure Compensation Value) can be set in 1/3 EV steps from −3.0 EV to +3.0 EV.

RPT

RPT Flash Mode. RPT flash mode can make one image displays as a serial continuous moving image. Under RPT flash mode, you can set flash output power, flash times and flash frequency.

1. The number of flash firing is the number of times the flash fires per frame.
2. The frequency of flash firing is the number of times the flash fires per second.
3. Set cameras shutter speed when using RPT mode. Calculate the shutter speed by using following formula, and then set camera shutter speed less than that of calculated by the formula.

Shutter speed= the number of flash firing/ the frequency of flash firing.

For example, if the number of flash firing is 10(times), the frequency of flash firing is 5(Hz). Then set the shutter speed over 2 second. You may also set Bulb mode.

※ Since low shutter speed is used under RPT mode, use of a tripod is recommended to prevent camera/ speedlite from shaking.
※ Under RPT mode, flash output level can be set between M 1/8 to M 1/128.

M

Manual Flash Mode. You can set the flash output from 1/128 power to 1/1 full output in 1/3 increments.

Set flash output power with dial selector. Turn left to reduce setting parameter, and turn right to increase setting parameter,

USB Port

It's applied to upgrade the firmware. You can download the newest firmware from PIXEL website www.pixelhk.com.

PC Port

It's applied to connect camera with SYNC cable or trigger flash.

PUSH Reflect Lock Release Button

By pressing this button, the flash head can be adjusted to up/down and left/right. Up/down ward angle-7 to 90 degree, left/right angle 180 degree.

Reflector

Using the reflector enables you to reflect light in a person's eyes and create a more vivid expression.

When using, pull out the reflector and wide panel together, and push back the wide panel. Then you may use the reflector.

Wide Panel

Using wide panel, flash coverage range will enlarge.

When using, pull out the reflector with wide panel together and push back reflector. then you may use the wide panel.

Wireless Flash Control

X800N PRO supports optical transmission and radio transmission flash control function.

[ ] Optical transmission mode;
[ ] FSK 2.4GHz radio transmission mode.

Wireless Flash Control(Optical Transmission)

The X800N PRO speedlite supports optical transmission flash control function. The speedlite mounted on the camera can transmit signal via optical pulse to control firing remotely. When using wireless flash mode, the speedlite mounted on the camera should set as Master mode, and the off-camera flash set as Slave mode. Optical transmission flash is achieved by optical pulse, not wireless radio signal transmission, so the transmission distance is very short. Please note the following issues when using:

1. Make sure the slave unit within effective control range when using optical transmission flash mode;
2. The receiving signal sensor of slave unit should face to master unit;
3. You are required to use flashes that are equipped with an optical transmission shooting function;
4. Please do not place any obstacles between the master unit and salve unit when using optical transmission flash mode, or it may affect optical signal transmission;
5. Under wireless flash mode, RPT firing only supports Red-eye Reduction and 1st curtain sync function.

Optical Transmission Flash Function Parameter

Transmission Method: Optical pulse
Mode Control: Master/Slave, S1/S2
Channel Control: 1-4 channels
Group Control: 3 groups(A/B/C)
Transmission Distance: about 0.7-10m
Flash Ratio Control: 8:1-1:1-1:8
Sync Mode: HSS,1st curtain sync, 2nd curtain sync, Red-eye Reduction sync
Flash Mode: TTL/M/RPT

Optical Transmission Flash Control Operation Introduction

Hold and press*CLS button to enter wireless flash Master mode
Hold and press this button again to enter wireless Slave mode(SL)
Hold and press this button once again to exit wireless flash mode
Under wireless Master flash mode, you can set flash channel, Master flash ON/OFF and flash mode for every group of Slave units.

1. Wireless Flash Mode Select

After entered wireless flash Master mode, gently press SET*CLS button and then turn dial selector to select optical transmission mode [ ].

2. Wireless Flash Channel Setting

After entered wireless Master flash mode, continuously press SET*CLS button and then turn the dial selector to set flash channel [CH1]. In total, 4 flash channels [CH1-CH4] for options. Slave flash channel need to set in the Slave interface. If the transmission channels of the Master unit and Slave unit are different, then the Slave unit doesn't fire. Master and Slave unit must be set to the same channel.

3. Master Flash ON/OFF Setting

After entered wireless Master flash mode, continuously press SET*CLS button to enter Master Flash ON/OFF [ ] , then turn dial selector to select Master Flash ON [ ] or OFF [ ] When flash is ON, Master flash will join in exposure. When flash is OFF, Master flash will not join in exposure.

※ Under Slave mode, it's not available to set flash ON/OFF. Here It's ON by default.
※ When using optical transmission function and the Master flash set as OFF, the Master flash may join in exposure under low sync speed according to optical pulse transmission theory.

4. Flash Mode Setting for Every Group of Slave Units

After entered wireless flash mode, continuously press SET*CLS button, and then move setting icon to Group Setting [ABC], then turn the dial selector. Use with SET*CLS button to set the flash mode and flash ON/OFF for every group individually. Press -/+ button to set the output power and exposure compensation of Master/Slave units.

Wireless Flash Mode Setting

Under wireless Master mode, press MODE button to set the flash mode of Master unit as TTL, M and RPT directly.

1. Under wireless mode, if need more flash output, you can invite the numbers of the salve unit which is unlimited.
2. Under wireless flash RPT mode, the flash frequency can be set as 1-100Hz, and the flash power as 1/8 to 1/128.

Wireless Slave Mode Setting

Under wireless slave mode, you can set flash channel, Slave group, and S1/S2 mode.

The flash mode and output power of Slave unit is controlled by Master unit directly. Press MODE button, the interface will display MODE CLS as Slave mode. Under Slave mode, the AF-assist beam will blink every 3 second.

S1/S2 Mode

S1 Manual Optical Control Mode: when set flash as this mode, it can work with the first firing of the Master flash synchronously. Set Master flash as manual M mode. Here TTL or RPT mode.

S2 TTL Optical Control Mode: when set flash as this mode, it can work the TTL mode of the Master flash synchronously. Set Master flash as TTL mode. The M or RPT mode cannot be fired.

Under wireless Slave (SL) mode, press MODE button to set S1/S2 mode. Press -/+ button to set the output power of S1/S2.

※ S1/S2 mode must be set under optical transmission Slave mode. If under radio FSK 2.4GHz mode, then you can't set S1/S2 mode.

Radio Flash Control

X800N PRO speedlite is equipped with FSK 2.4GHz radio transmission wireless flash shooting function. With radio transmission, flash firing is less affected by obstacles, so its transmission and control efficiency are much higher. When using with PIXEL King PRO/Nikon together, or among X800N PRO speedlites (Master/Slave), you can use wireless radio transmission flash.

Radio Transmission Flash Function Parameter

Transmission Method: FSK2.4GHz
Mode Control: Master/Slave
Channel Control: 1-15 channels
Group Control: 3 groups (A/B/C)
Transmission Distance: about 50M
Flash Mode: TTL/M/RPT
Sync Mode: HSS, 1st curtain sync,
2nd curtain sync and Red-eye Reduction Sync

Radio Flash Control Operation Introduction

Hold and press*CLS button to enter wireless flash Master mode
Hold and press this button again to enter wireless Slave mode(SL)
Hold and press this button once again to exit wireless flash mode
Under wireless Master flash mode, you can set flash channel, Master flash ON/OFF and flash mode for every group of Slave units.

1. Wireless Flash Mode Select

After entered wireless flash Master mode, gently press SET*CLS button and then turn the dial selector to select radio flash mode [ ].

2. Flash Flash Channel Setting

After entered wireless flash Master mode, gently press SET*CLS button and then turn the dial selector to set flash channel [CH1], 15 flash channles [CH1-CH15] for options in total. Slave flash channel need to set in the Slave interface. If the transmission channels of the Master unit and Slave unit are different, then the slave unit won't fire. Both Master and slave must be set to the same channel.

3. Master Flash ON/OFF Setting

After entered wireless flash Master mode, continuously press SET*CLS button, and then move setting icon to Master Flash ON/OFF [ ], then turn dial selector to select Master Flash ON [ ] or OFF [ ] .
When flash is ON, Master flash will join in exposure.
When flash is OFF, Master flash will not join in exposure.

4. Flash Mode Setting for Every Group of Slave Units

After entered wireless flash mode, continuously press SET*CLS button, and then move setting icon to Group Setting [ABC], then turn the dial selector. Use with SET*CLS button to set the flash mode and flash ON/OFF for every group individually. Press -/+ button to set the output power and exposure compensation of Master/Slave units.

Master Flash Mode Setting

Under wireless Master mode, press MODE button to set Master unit flash mode as TTL, M or RPT.

1. Under wireless mode, if need more flash output, you can invite the numbers of the Slave units which is unlimited.
2. Under wireless flash RPT mode, the flash frequency can set as 1100Hz, and flash power as 1/8-1-128.

Wireless Slave Mode Setting

Under wireless Slave [SL] mode, you can set flash channel and Slave groups. The flash mode and output power of Slave units can be controlled directly by Master unit. If set as Slave mode, the flash AF- assist beam will blink for every 3 sec.

Error Warinig Prompt

When an error occurs on the flash or overheating protection is activated, the following information is display on the screen:

Motor Error Prompt:
WARNING: MOTOR ERROR

Motor Error, Battery and Flash Head Overheating Prompt:
WARNING: MOTOR ERROR BAT LAMP TEMPERATURE

Motor Error, Flash Head Overheating Prompt:
WARNING: MOTOR ERROR LAMP TEMPERATURE

Flash Head Overheating Prompt:
WARNING: LAMP TEMPERATURE

Battery Overheating Prompt:
WARNING: BATTER TEMPERATURE

Unknown Error Prompt:
WARNING: ERROR 90

※ When a prompt occurs on flash motor and unknown error, you are advised to switch on-off the flash repeatedly to make it self-recovery. After recovery, the prompt info will disappear, and you can reuse it. If not, you are advised to contact the dealer for repair.

※ When you use the flash continually, flash head and battery overheating protection will be activated, then the LCD display screen will shows error prompt and restrict flash firing. Now please turn off the flash and allow a rest time for reuse. Then the prompt info will disappear, and you can reuse it.

Warranty

One year warranty from the day of purchase. Please kindly contact PIXEL or distributor for more details.

Thank you for using PIXEL product and read this instruction manual. If you have any questions, please contact your local dealer or visit http:/www.pixelhk.com

The instruction manual is updated on Oct. 16,2015 For information on the compatibility with accessories marketed after this date, please contact PIXEL's dealer for advice.